K-LiTE

Trioscape

LED compact spot light luminaires designed to provide directional light. The luminaires comes with a connecting cable and an earth spike for portable installation or bracket for permanent installation on a wall, under a ceiling or on a column.



Product Description

- Luminaire made of pressure die cast aluminium alloy of high corrosion resistance and non corrosive stainless steel fasteners.
- Clear toughened glass.
- Mounting earth spike or die-cast bracket arrangement to facilitate easy installation at any desired location.
- Swivel range of 0°-90°.
- Silicone gasket.
- Luminaire supplied with 0.5 metre cable length.
- Prewired with GU10 holder and suitable for operation on 240V, 50Hz single phase ac supply.

IP65 | IK06

Product Benefits

- Sturdy construction in order to maintain performance of the luminaire and to reduce maintenance costs.
- Quick & simple installation.
- Clear glass in the front with continuous rubber gasket to ensure adequate sealing against ingress of moisture, dust, insects etc.,

Areas of Application

Pathways, Parks, Sculptures, Gardens, Structures and Landscape lighting.

Available Finish

Pure polyester powder coated
RAL 9004 Black
RAL 7016 Anthracite grey
Graphite grey

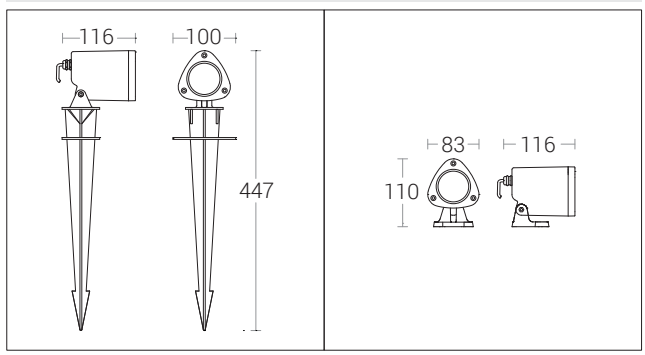

ID	Description	Wattage
22547	Spike / Bracket	GU10 Holder

K-LiTE

Trioscape

LED compact spot light luminaires designed to provide directional light. The luminaires comes with a connecting cable and an earth spike for portable installation or bracket for permanent installation on a wall, under a ceiling or on a column.



Product Description

- Luminaire made of pressure die cast aluminium alloy of high corrosion resistance and non corrosive stainless steel fasteners.
- Clear toughened glass.
- Mounting earth spike or die-cast bracket arrangement to facilitate easy installation at any desired location.
- Swivel range of 0°-90°.
- Luminaire supplied with 0.5 metre cable length.
- Silicone gasket.
- Cable entries for through-wiring of mains supply cable.
- Integral constant current power supply
- CRI (Ra) : >90
- Prewired with LED driver and suitable for operating on 240V, 50Hz single phase ac supply.
- Ordering guide : KL-22547-CCT (Colour Temperature)
- Available CCT : 2700K, 3000K, 4000K, 6500K

IP65 IK06

Product Benefits

- Sturdy construction in order to maintain performance of the luminaire and to reduce maintenance costs.
- Quick & simple installation.
- Clear glass in the front with continuous rubber gasket to ensure adequate sealing against ingress of moisture, dust, insects etc.,
- Sustainable LED technology offers durability and optimal light output with low power consumption.

Areas of Application

Pathways, Parks, Sculptures, Gardens, Structures and Landscape lighting.

Available Finish

Pure polyester powder coated
RAL 9004 Black
RAL 7016 Anthracite grey
Graphite grey

K-LITE

Trioscape





TABLET INDIA RESIDENCE, BOAR CLUB, CHENNAI

Technical Specifications

General

ID	: 22547
System Wattage	: 6W
Driver Integral	: Constant Current
Operating Voltage	: 100-240Vac
Operating Temperature	: -15°C~+50°C

Physical

Body	: Die-cast Aluminium Alloy
Diffuser	: Clear Toughened Glass
Mounting	: Spike / Die-cast Aluminium Bracket
Finish	: Powder coated RAL 9004 Black RAL 7016 Anthracite grey Graphite grey

Light Source

Light Source	: CITIZEN
CRI (Ra)	: >90
LED Colour Temperature	: 2700K / 3000K / 4000K / 6500K

Driver

Power Supply	: Integral
Input Voltage	: 230-240Vac
Frequency	: 50-60 Hz

Optical Performance

Optical Beam Angle	: 12° / 24° / 40°

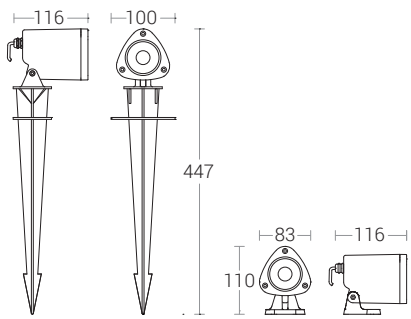

IP65 IK06

Photometric Data

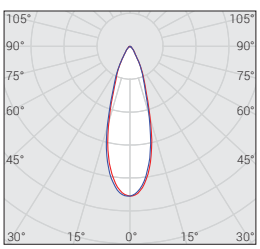

Note : It is our constant endeavor to upgrade the performance of our products. For the latest technical information, IES files and product updates please refer to the website at **www.klite.in**

K-LITE

Trioscape



NEHRU PARK, GUWAHATI



Technical Specifications

General

ID	: 22547
System Wattage	: 12W
Driver Integral	: Constant Current
Operating Voltage	: 100-300Vac
Operating Temperature	: -15°C~+50°C

Physical

Body	: Die-cast Aluminium Alloy
Diffuser	: Clear Toughened Glass
Mounting	: Spike / Die-cast Aluminium Bracket
Finish	: Powder coated RAL 9004 Black RAL 7016 Anthracite grey Graphite grey

Light Source

Light Source	: CITIZEN
CRI (Ra)	: >90
LED Colour Temperature	: 2700K / 3000K / 4000K / 6500K

Driver

Power Supply	: Integral
Input Voltage	: 230-240Vac
Frequency	: 50-60 Hz
Power Factor	: >0.95
THD	: <10%
Surge Protection	: 4KV
Efficiency	: >80%

Optical Performance

Optical Beam Angle	: 12° / 24° / 40°

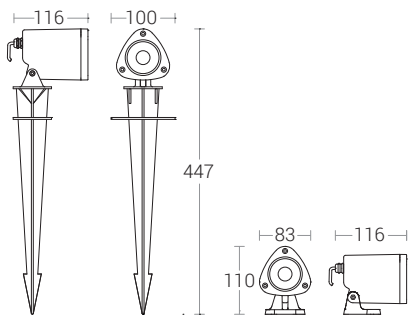

IP65 IK06

Note : It is our constant endeavor to upgrade the performance of our products. For the latest technical information, IES files and product updates please refer to the website at **www.klite.in**

K-LiTE

Water Arrestor

Additional Feature

A water arrestor in lighting products serves to prevent water intrusion into the fixture, which is especially important given the exposure to outdoor conditions and possible water pooling around the fixture. Its main functions are :

Pressure Regulation :

The water arrester helps regulate internal pressure changes that can occur due to temperature fluctuations. This reduces the risk of water being drawn into the fixture when it cools and contracts & Supports pressure equalization to avoid condensation buildup inside the housing.

Seal Protection :

By acting as a barrier to water vapor or moisture, the arrester helps maintain the integrity of seals and gaskets over time, reducing the risk of water ingress and extending the life of the fixture.

Enhanced Durability :

Preventing moisture inside the fixture avoids corrosion, electrical shorts, and fogging of the lens, ensuring optimal lighting performance and reducing maintenance needs. Protects internal electrical components from moisture damage.

In short, a water arrestor enhances the longevity and performance of lighting products by keeping internal components dry.

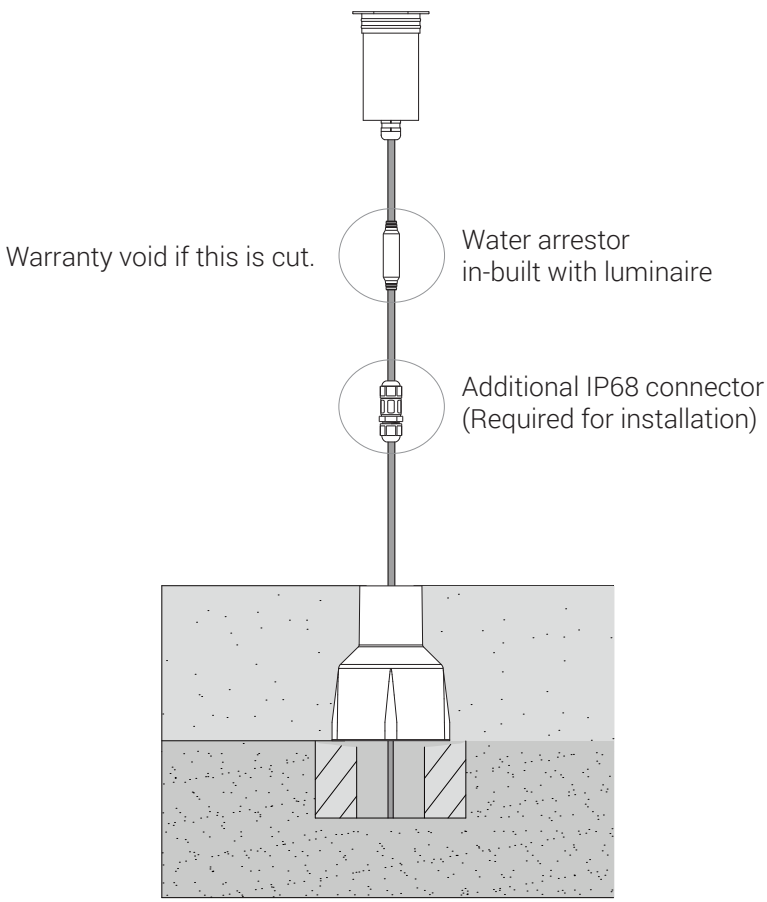

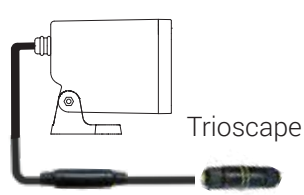

Additional IP68 connector (Required for installation)

Warranty void if this water arrestor is cut.