K-LiTE

Navi Midi Spot

The Navi Midi - Flood Light is a powerful and efficient lighting fixture designed for a wide range of applications. It delivers a bright, focused light suitable for outdoor and large-area illumination. It provides robust protection against dust and water, ensuring reliable performance in various weather conditions. The Navi Midi - Flood Light is built to withstand mechanical impacts, enhancing its durability and longevity.

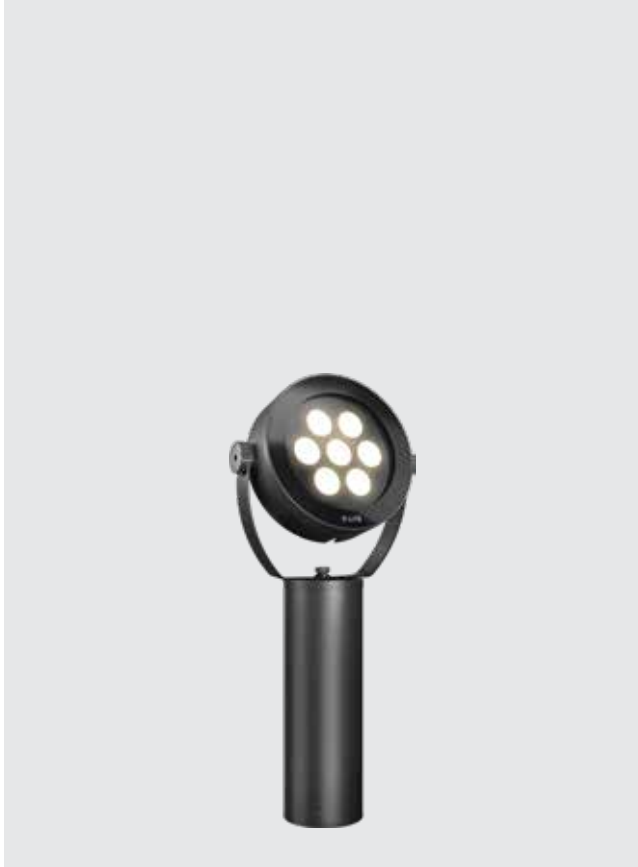

MATERIAL

Body	: Pressure die-cast aluminium & Extruded aluminium alloy (grade 6063) tube.
Bracket	: Stainless Steel
Impact Protection	: IK07
Ingress Protection	: IP65
Diffuser	: Clear Toughened Glass
Gasket	: Clear Silicone
Mounting	: Surface

ELECTRICAL

Driver	: Standard
Power Supply	: Integral
Input Voltage	: 230-240Vac / 50-60 Hz
Surge	: 6KV

PRODUCT CONFIGURATIONS

Wattage	: 90W
Optical Beam Angle	: 6°
CCT	: 2700K / 3000K / 4000K / 5700K
LED Life Time	: L70 B10 60,000 H

AREA OF APPLICATION

Architectural and building facade lighting, Pathways, Parks, Sculptures, Structures and Security lighting

AVAILABLE FINISH

Pure polyester powder coated
RAL 9004 Black
RAL 7016 Anthracite grey
Graphite grey

K-LITE

Navi Midi Spot



BENGALURU INTERNATIONAL AIRPORT



Technical Specifications

General

ID	: 24467
System Wattage	: 90W
Driver Integral	: Constant Current
Operating Voltage	: 100-300Vac
Operating Temperature	: -15°C~+50°C

Physical

Body	: Die-Cast Aluminium & Extruded Aluminium Tube
Diffuser	: Clear Toughened Glass
Mounting	: Surface
Finish	: Powder coated RAL 9004 Black RAL 7016 Anthracite grey Graphite grey

Light Source

Light Source	: LUMILEDS
CRI (Ra)	: ≥70
LED Colour Temperature	: 2700K / 3000K / 4000K 5700K

Driver

Power Supply	: Integral
Input Voltage	: 230-240Vac
Frequency	: 50-60 Hz
Power Factor	: >0.95
THD	: <10%
Surge Protection	: 6KV
Efficiency	: >85%

Optical Performance

Optical Beam Angle	: 6°

IP65 IK07

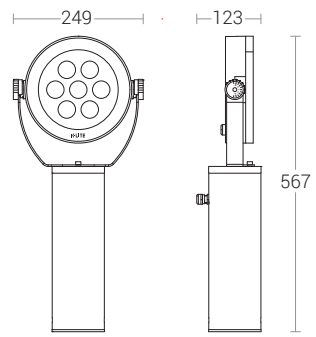

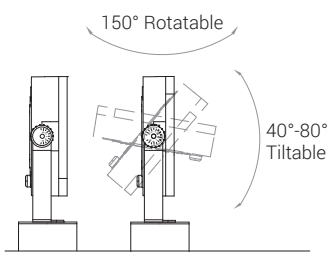

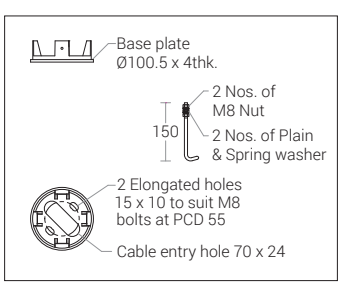

Accessories



Anti-Glare Visor

Note : It is our constant endeavor to upgrade the performance of our products. For the latest technical information, IES files and product updates please refer to the website at **www.klite.in**